MODEL #PRH6-K30

Professional Under Cabinet Hood with Low-Profile Blower (V-Line)

Professional styling and crisp architectural lines make this hood a versatile fit for both traditional and transitional kitchens. Powerful Low-Profile blower technology uses centrifugal filtration to quietly capture smoke, grease and cooking vapors. Dishwasher-safe components simplify cleanup.

To view available finishes & accessories please visit ventahood.com/products/PRH6-K30

SPECIFICATIONS

WIDTH	30"
DEPTH	19 1/2"
HEIGHT	6"
CFM [1]	250
EQUIVALENT CFM [2]	375
SOUND RATING (HIGH SPEED) [3]	7.4 Sones / 58.2 dB
LIGHTING [4]	2 LED GU10s 3000K Warm White

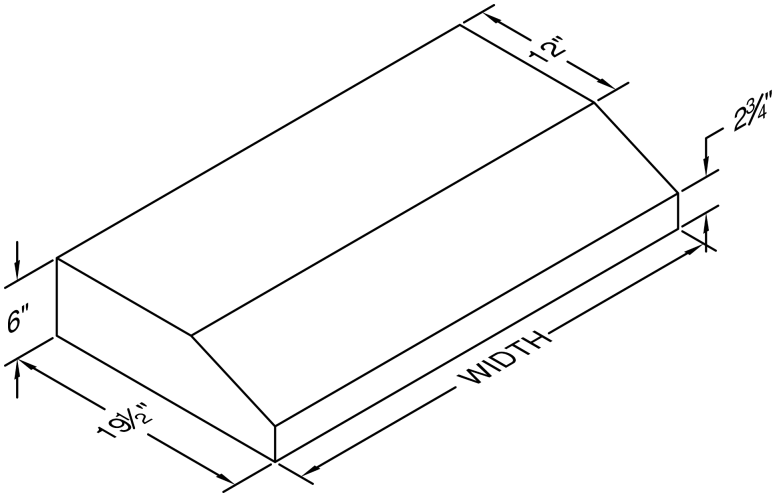

RECOMMENDED MOUNTING HEIGHT

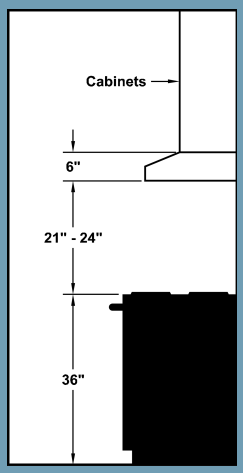

NOTE: Exceeding recommended mounting height may compromise performance.

CONNECTIONS

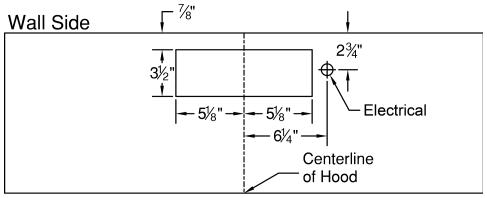

(Top View)

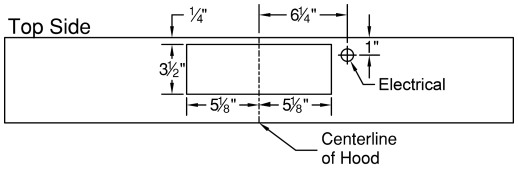

(Wall Cutout, Viewed from Front)

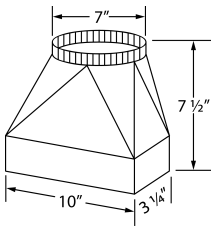

The VP521 transition is available for top vent applications at an additional charge.

ELECTRICAL/MECHANICAL SPECIFICATIONS FOR BLOWER UNIT

MODEL	VOLTS	AMPS	HZ	RPM	CFM @ 0.0" SP[5]	CFM @ 0.1" SP	CFM @ 0.2" SP	CFM @ 0.3" SP	MIN. ROUND DUCT SIZE
K250 (Top Vent) ARS	115	3.5	60	1550	250	223	220	190	7" (38sq.in.)

[1] CFM (cubic feet per minute) measures airflow. [2] Because Magic Lung® blowers use centrifugal filtration instead of traditional baffle or mesh filters, they move air more efficiently. When comparing to other brands, use Equivalent CFM to understand real-world performance. [3] Sones measure perceived loudness—lower values indicate quieter operation. Decibel values shown are approximate equivalents. [4] This model is not available with heat lamps. [5] Airflow (CFM) decreases as duct resistance (static pressure) increases. Values at 0.1"–0.3" SP reflect typical installed conditions.

SPECIFICATIONS SUBJECT TO CHANGE WITHOUT NOTICE 062626